LBNL Precision Measurement

One Cyclotron Road, 77/125
Berkeley CA, 94720
Ph. (510) 486-7611

Measurement Plan	Date	Order
Phenix FVTX Stations 2_3_4 Sensor Backplanes	February 8, 2010	111-PHX-02-3701
Length unit	**Time**	**Incremental Part Number**
MM	3:37:41 pm	8

	Actual	Nominal	Upper Tol.	Lower Tol.	Deviation
Flatness Plane Datum A	0.0449	0.0000	0.0500		|--- 0.0449
Flatness Plane Parallel to Datum A	0.0468	0.0000	0.0500		|--- 0.0468
Parallelism Plane Parallel to Datum A	0.0519	0.0000	0.0200		0.0319 0.0519

Flatness of Datum A

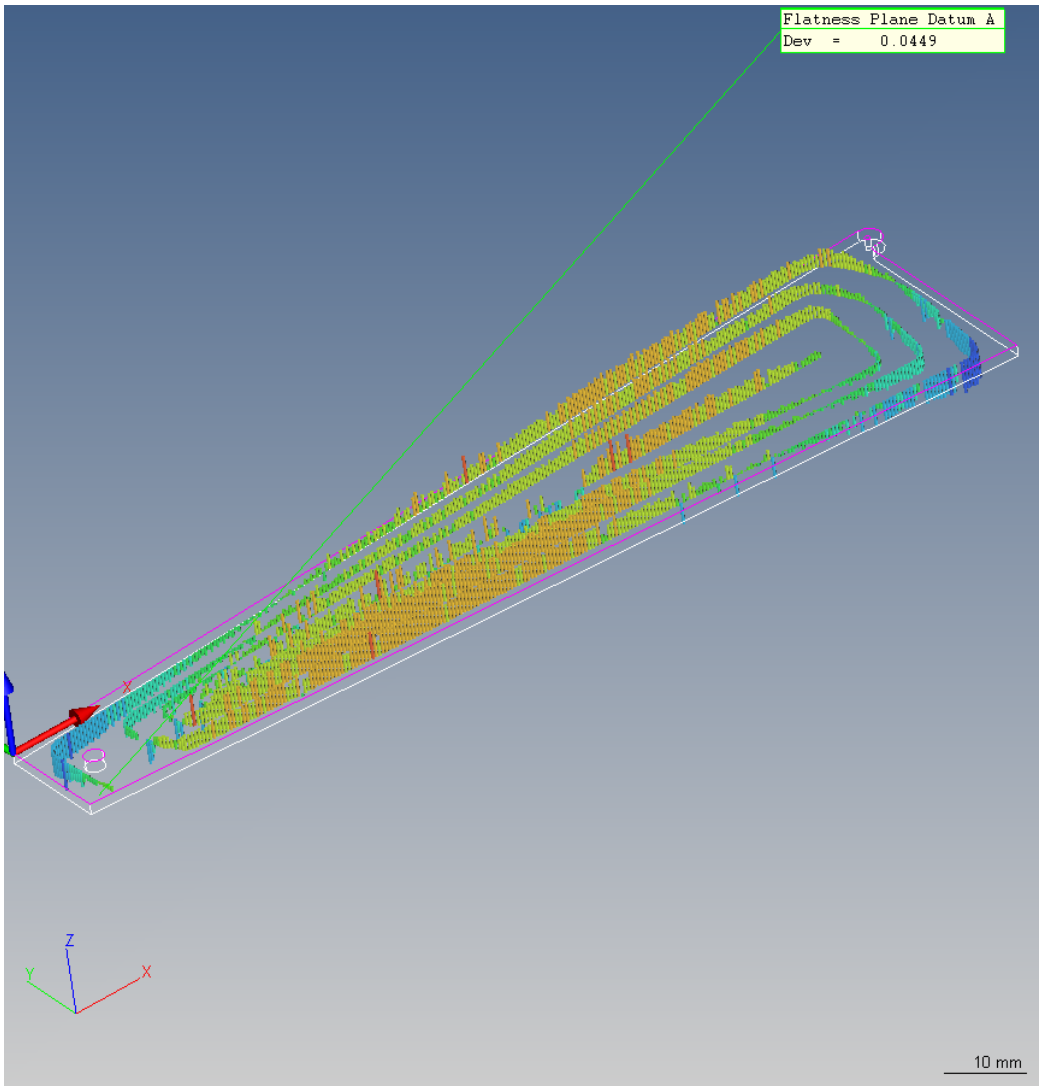
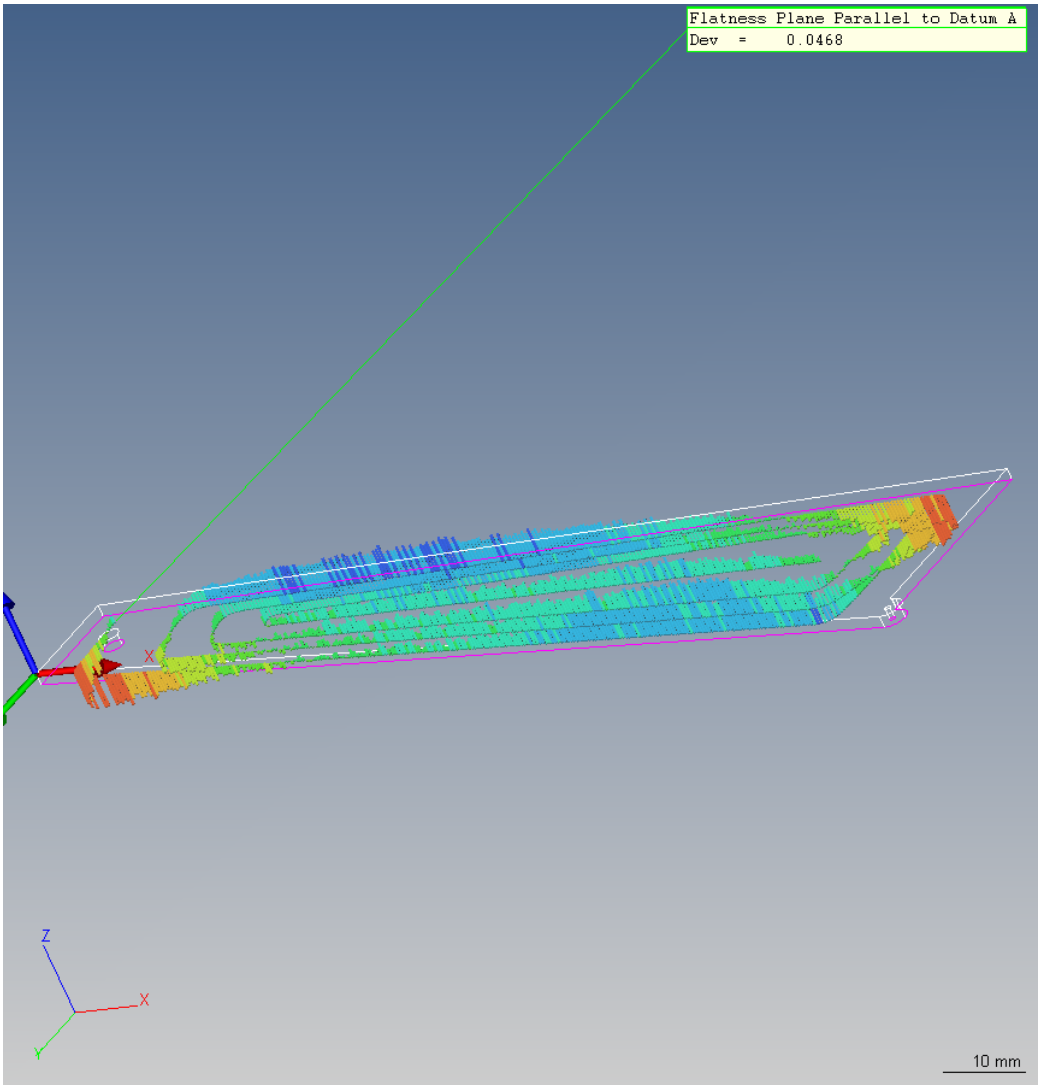
Flatness of Side Parallel to Datum A