LBNL Precision Measurement

One Cyclotron Road, 77/125
Berkeley CA, 94720
Ph. (510) 486-7611

Measurement Plan	Date	Order
Phenix FVTX Stations 2_3_4 Sensor Backplanes	February 8, 2010	111-PHX-02-3701
Length unit	**Time**	**Incremental Part Number**
MM	3:07:48 pm	5

	Actual	Nominal	Upper Tol.	Lower Tol.	Deviation
Flatness Plane Datum A					0.0821
	0.1321	0.0000	0.0500		0.1321
Flatness Plane Parallel to Datum A					0.0666
	0.1166	0.0000	0.0500		0.1166
Parallelism Plane Parallel to Datum A					0.0995
	0.1195	0.0000	0.0200		0.1195

Flatness of Datum A

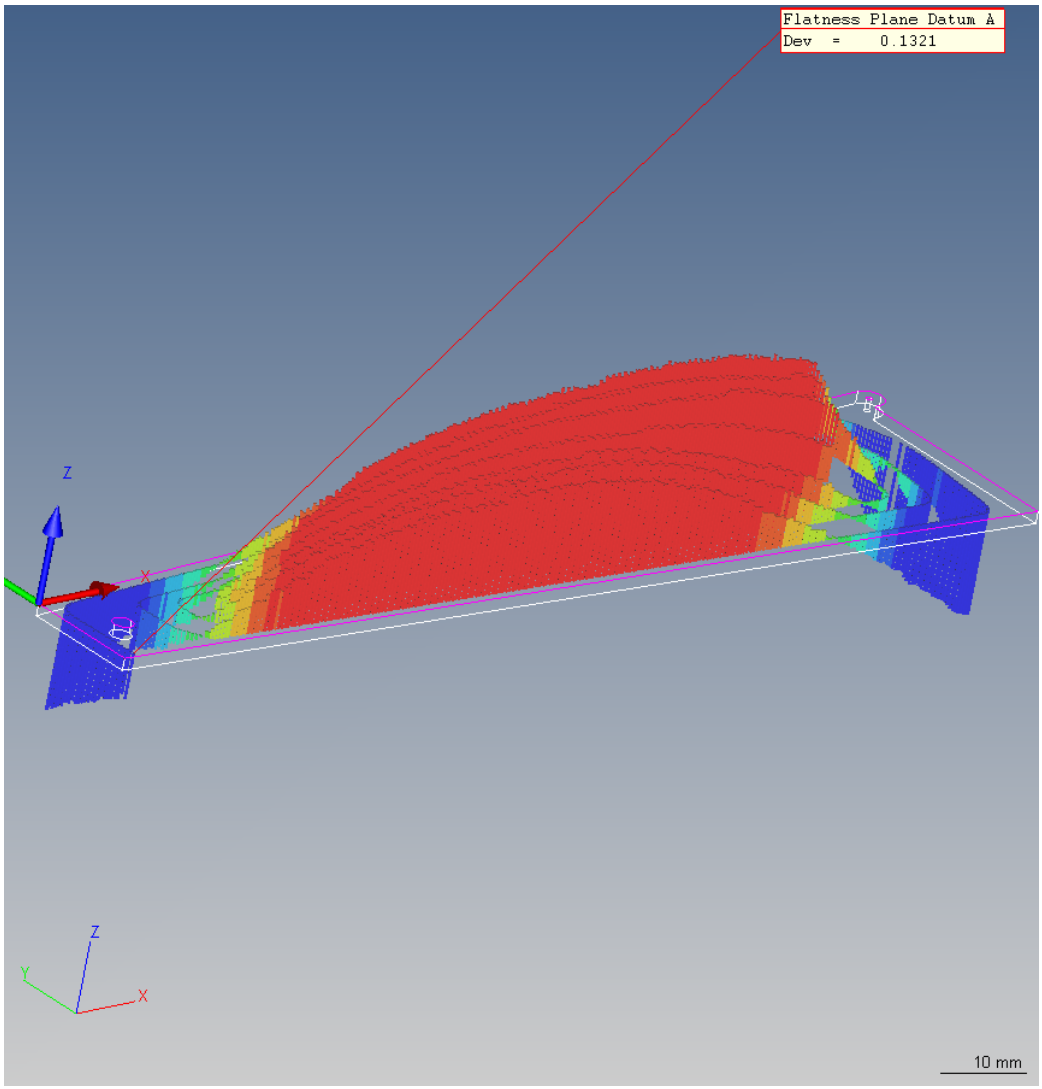
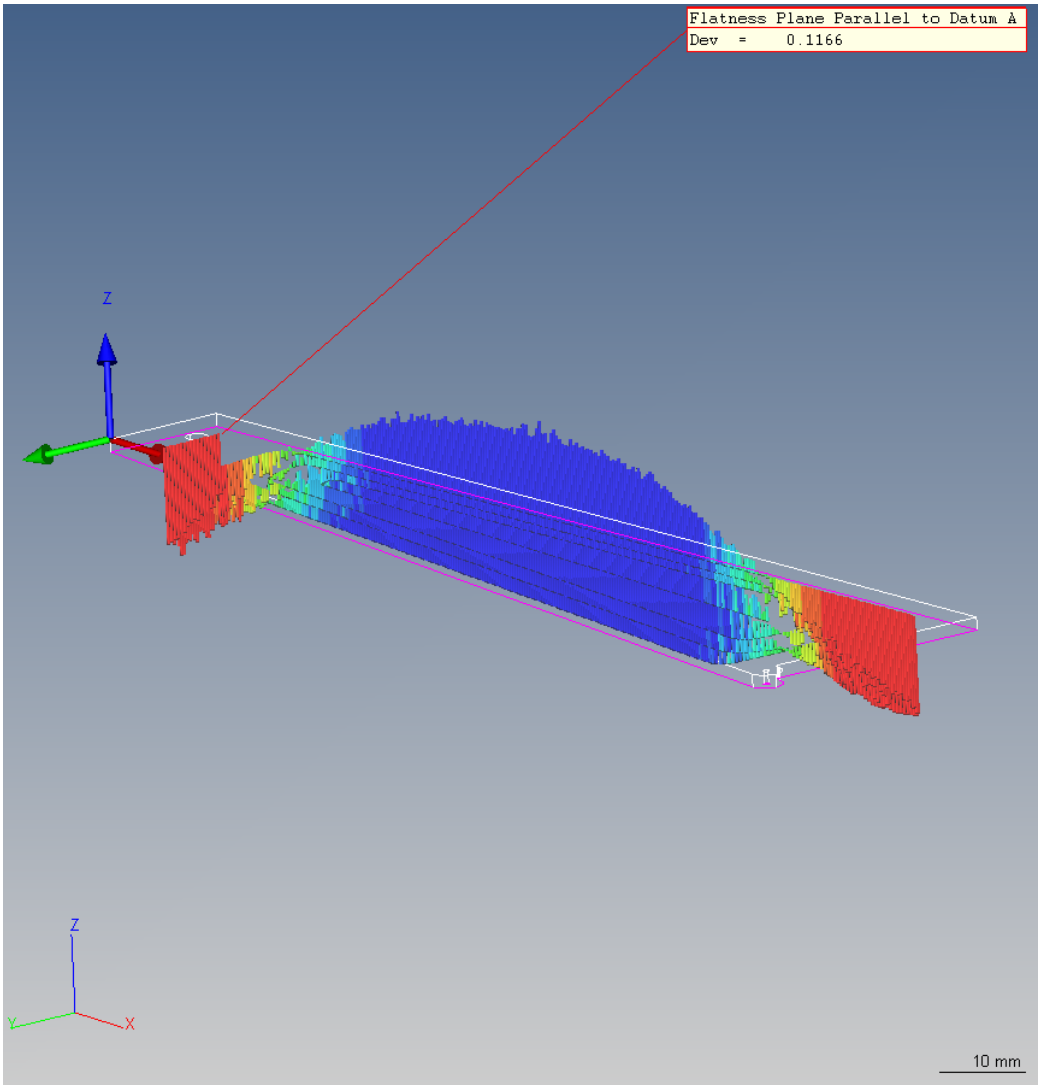
Flatness of Side Parallel to Datum A